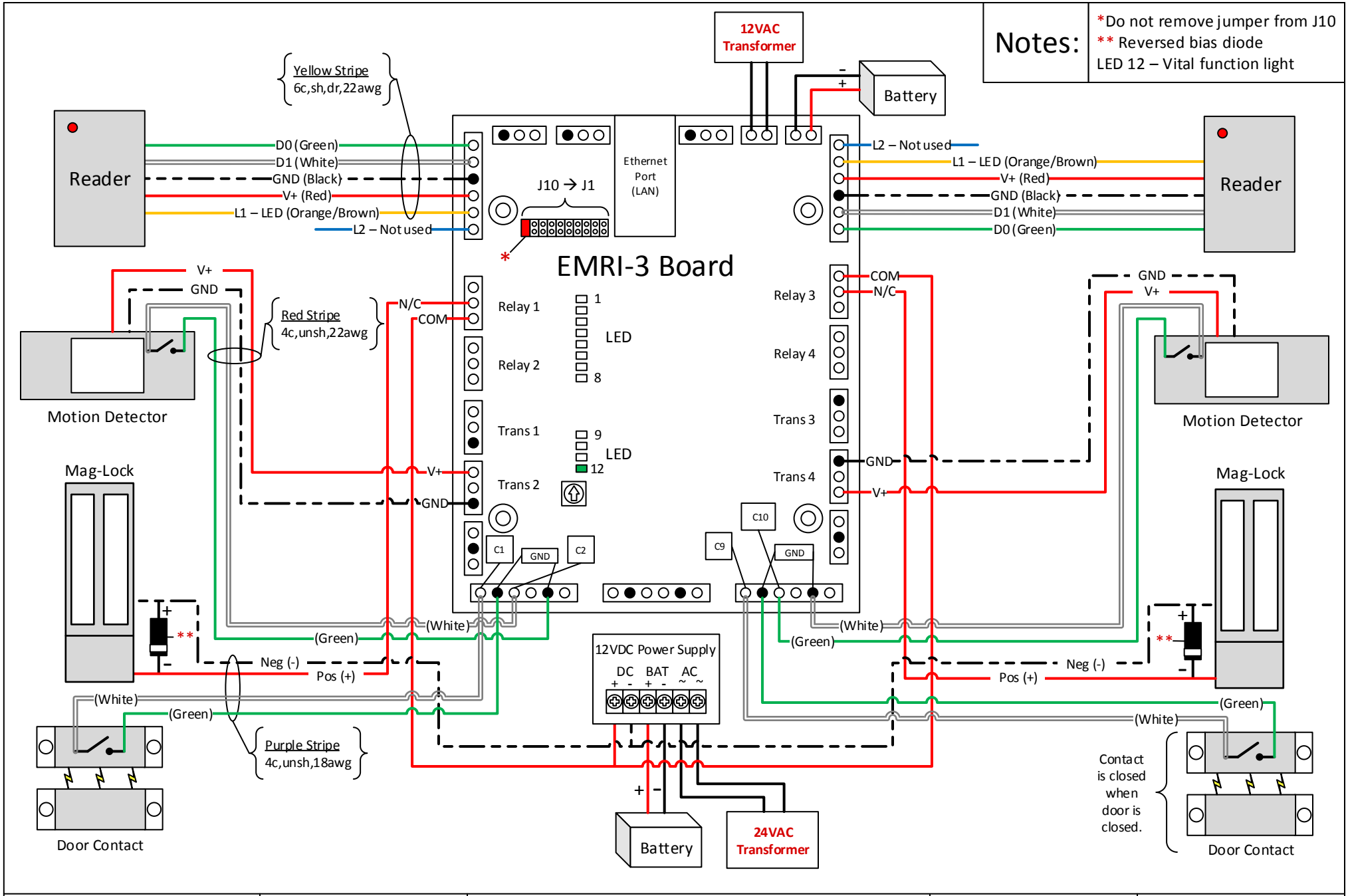

Entry-Master Systems, LLC

3710 Commerce Drive
Suite 1001
Baltimore, MD 21227
Tel: 443.543.6128

EMRI-3 Wiring Diagram

Maglocks using Relay Output

Drawn by: A. J. Johnson

Scale: Not to Scale

Edit Date: 4/14/2016

Version: 1.4